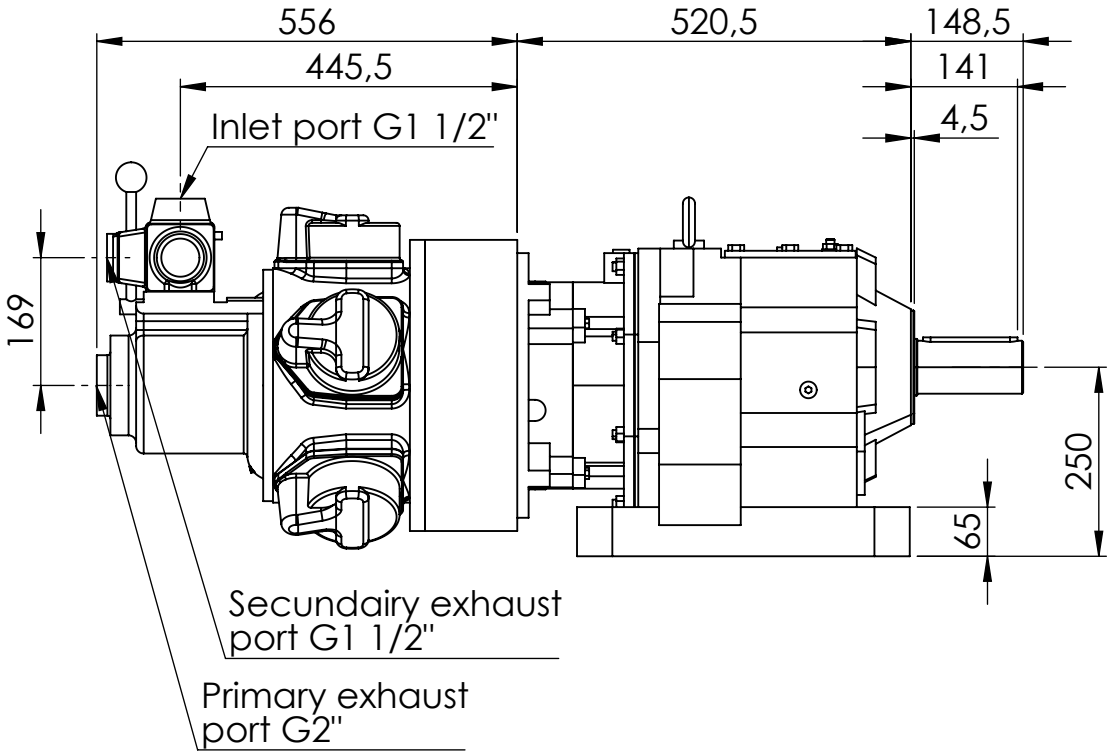

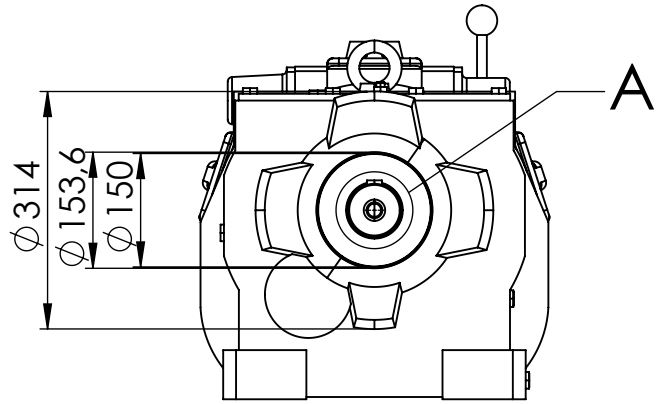

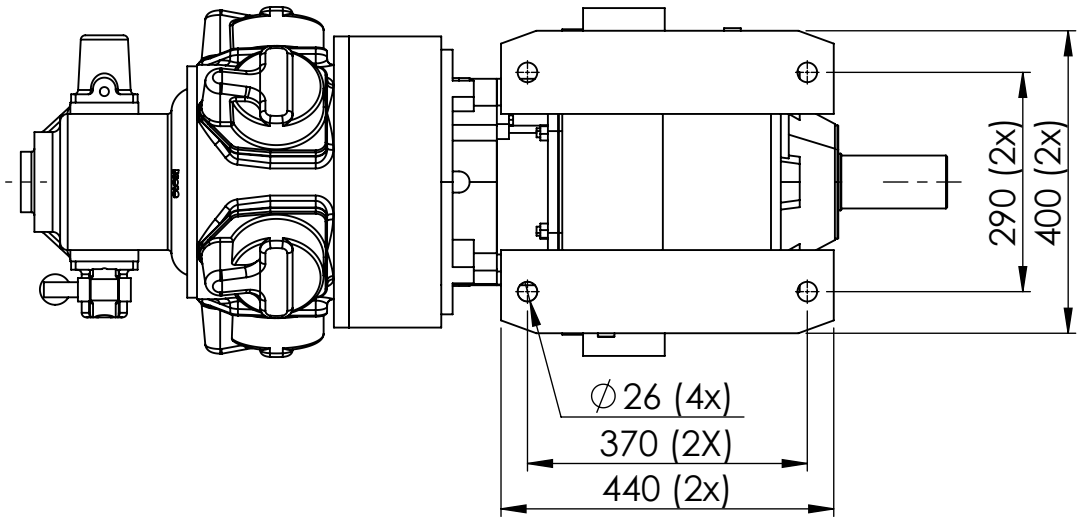

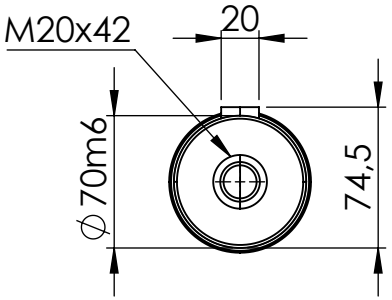

DETAIL A

SCALE 1 : 4

UNLESS OTHERWISE SPECIFIED DIMENSIONS ARE IN MILLIMETERS SURFACE FINISH TOLERANCES: LINEAR: ANGULAR:			FINISH:	DEBUR AND BREAK SHARP EDGES	DO NOT SCALE DRAWING / REVISION 0
	NAME	SIGNATURE	DATE	THIRD ANGLE PROJECTION	TITLE:
DRAWN	G. Smedes		17-2-2020 11:29:19		RM610SZ129BG18H6
CHK'D					
APPRV'D					
MFG				MATERIAL: N/A	DWG NO. A4
Q.A.					
				WEIGHT:	Scale: 1:10 / SHEET 1 OF 1

GLOBE AIRMOTORS B.V.