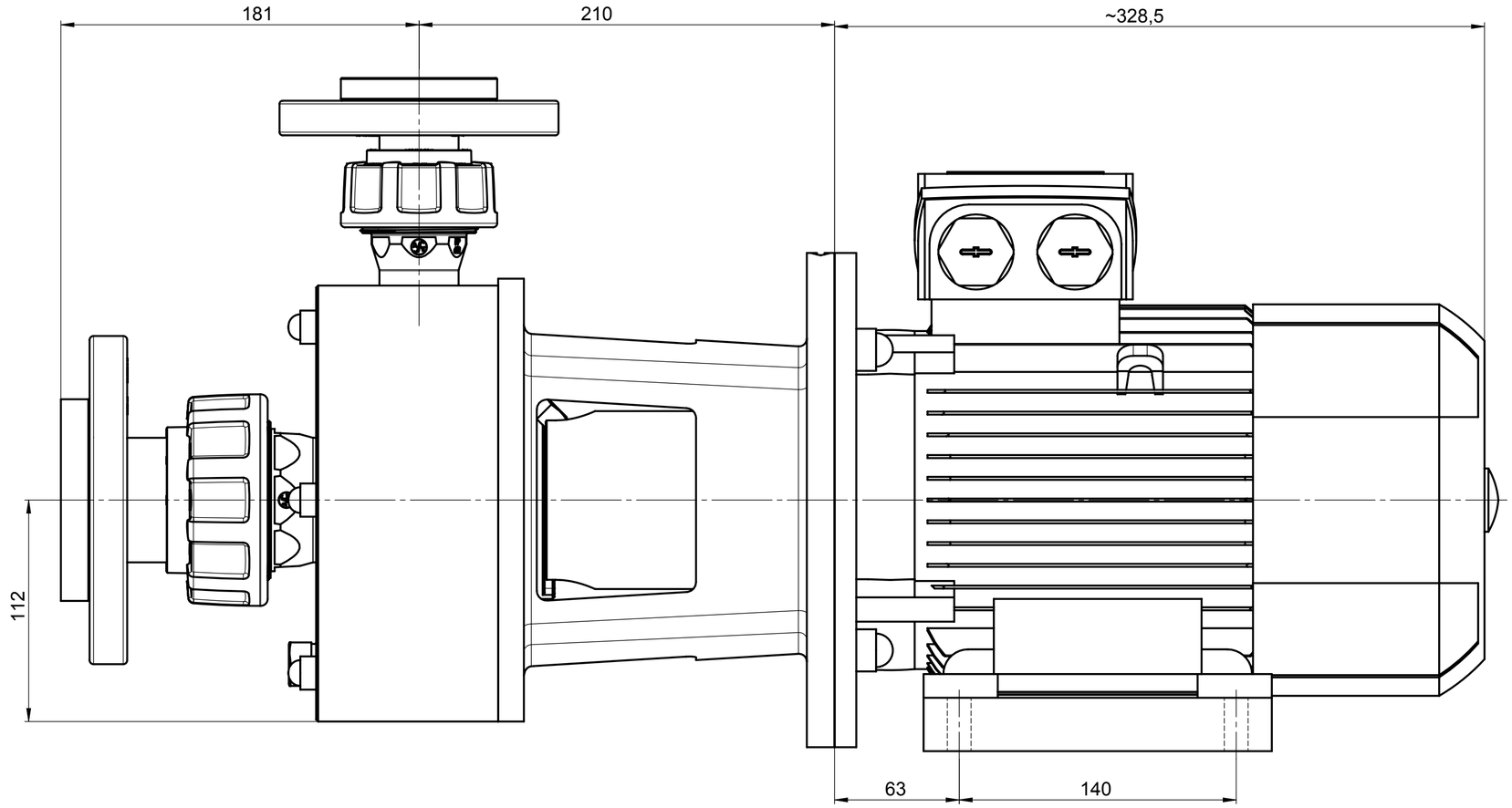

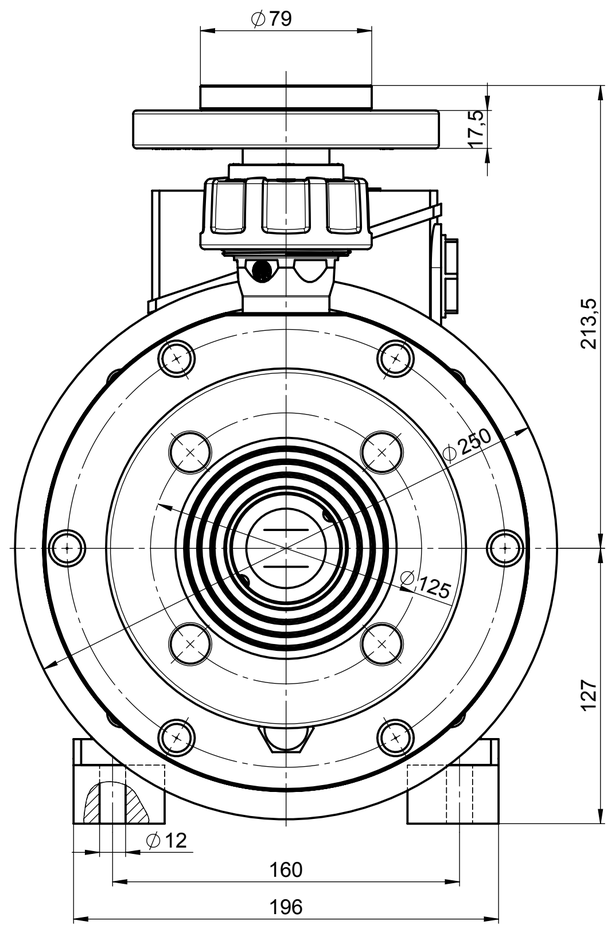

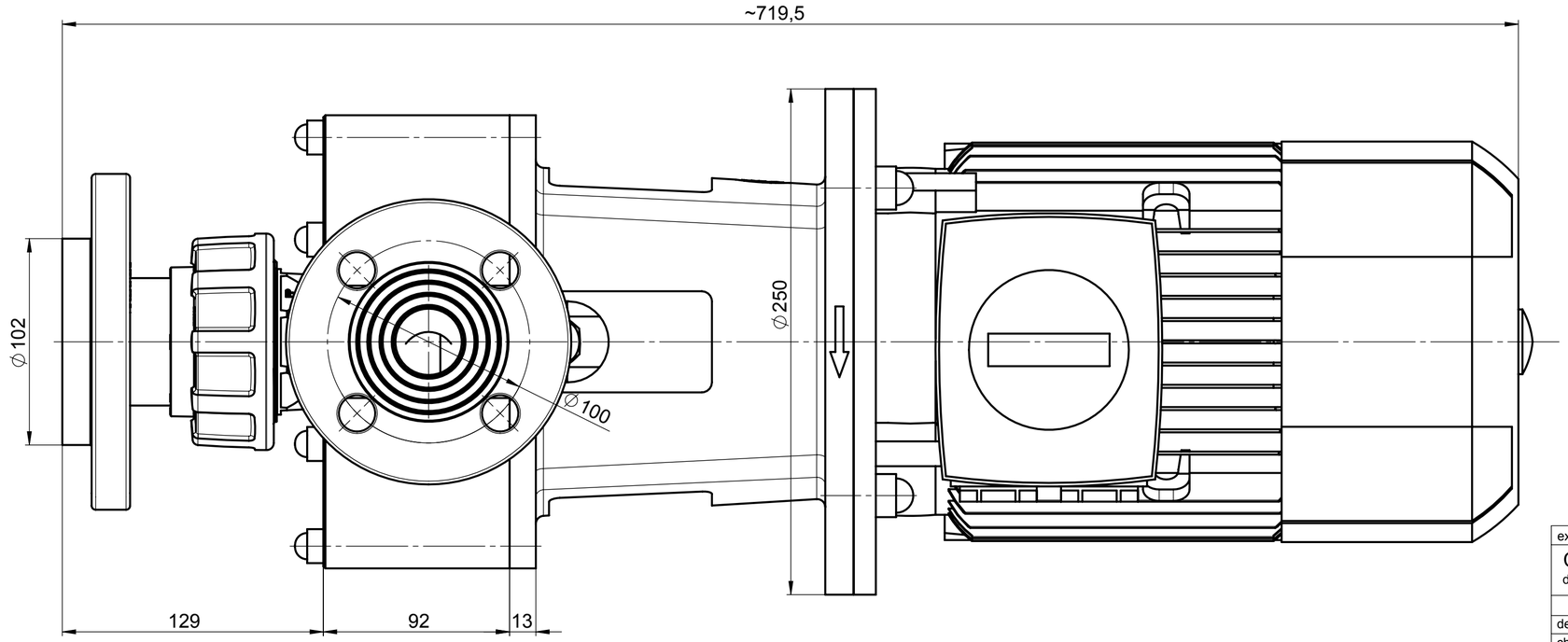

Material	Id. - No.
PP-FPM	189666
PP-EPDM	189663

This is a drawing derivation of a 3D model. Changes must be carried out in the 3D model.

ind.	change / no.	name	date

external drawing number:

CAD drawing	Copyright reserved	Divergences for dimension without tolerances DIN ISO 2768-mK DIN 16901	Surface roughness according to DIN ISO 1302, line 2	material:		weight:
				raw part no.:		
				mould insert:		
	date:	name:	part name:			scale:
designed:	05.10.18	Roland.Pohlmann	SHB32-125 PP-St Flansch DIN 3kW			1:2
checked:						

Stübbe® Partner for Solutions

ASV Stübbe GmbH & Co.KG
Postfach 1765
D-32591 Vlotho

ident no.:	index:	format:	sheet:
189666		A2	1
			1 sheets

deduced from:

filename: 189666_SHB32-125 PP-St Flansch DIN

Respect protective note according to DIN ISO 16016