Data Sheet

HOYER MOTORS

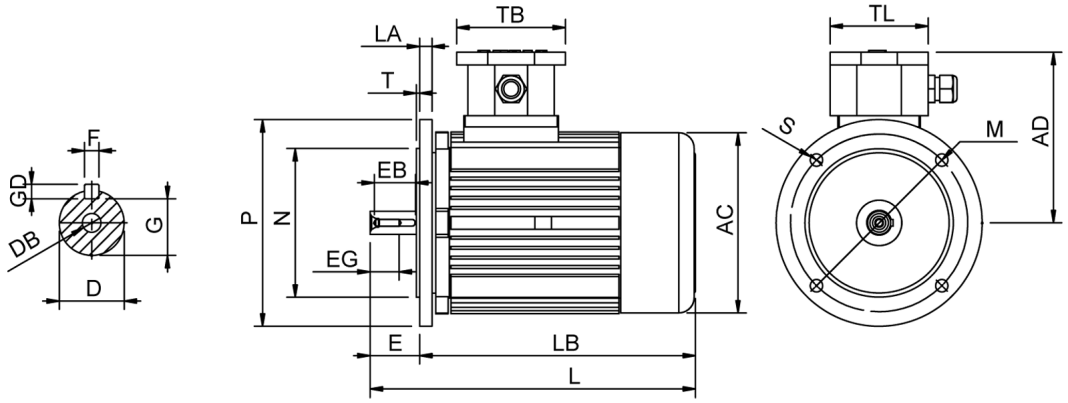

AC = 139	EG = 12	LA = 11	S = 4 - Ø9,5
AD = 164	F = 5	LB = 219	T = 3
D = 14k6	G = 11	M = 130	TB = 100
DB = M5	GD = 5	N = 110	TL = 112
E = 30	L = 249	P = 160	
EB = 25			

Type	**5ATA 71A-4**	Rotor inertia (kgm²)	0,00045
Mounting	B5	Noise level (dB(A))	45
Protection class	IP56	Vibration class	Grade-A
Insulations class	F	No load current (A)	0,80
Temperature rise	B	Winding resistance (ohm)	39,8
Standard	IEC 60034-1	Starting time (sec.)	10,00
Test standard	IEC 60034-2-1	Temperature rise winding	0
Alitude above s.l. max.(m)	1000	Temperature rise surface	0
Cooling method	IC411/TEFC	Tbox position	Top
Poles	4	Cable entry main	1xM20x1,5
Painting	Ral 9005		Ø6-12mm
DE. Bearing	6203-ZZ/C3	Cable entry accessory	1xM16x1,5
NDE. Bearing	6203-ZZ/C3	Terminal board thread	
Bearing fixed in	D-end	Thermal protection	PTC 3x130C
Weight (kg)	10,0	Space heater	1 X 25W / 220V
		Starting method	

Rated power (kW)	0,25			0,25			0,30		
Frequency (Hz)	50			50			60		
Voltage (V)	230	400		380			440		
Connection	D	Y		Y			Y		
Full load current (A)	1,50	0,85		0,89			0,90		
Speed (rpm)	1370			1370			1640		
Power factor cos(phi)	0,72			0,73			0,75		
Efficiency, 100/75/50 (%)	61,0	61,3	59,8	58,3	58,6	57,0	58,3	58,6	57,0
Efficiency class	IE1			IE1			IE1		
Ist/In	3,40			3,23			3,13		
Full load torque (Nm)	1,70			1,70			1,60		
Tst/Tn	2,00			1,80			1,78		
Tmax /Tn	2,10			1,89			1,87		
Duty	S1			S1			S1		
Ambient temp. (°C)	50			50			50		

According to .....:
Special features .....: EX II2G Ex db eb IIC T4 Gb, CESI 13 ATEX 008 X; Suitable for VFD